Steering Rack Overview

Aug 11, 2020

Important notes

- S3448 Steering rack to be used for Drag racing ***ONLY***
- See page 3 for pinion and clevis end adjustment
- If after reading, you have any questions or comments, please do not hesitate to call us.

Features

Steering rack and Pinion

- 22 to 1 ratio
- 24.5” tie rod centers
- 20° horizontal pinion angle
- 9/16”-26 spline pinion - Same spline as Mustang/Pinto
- 0° vertical pinion angle as shipped
- Pinion angle can be adjusted to 20˚ to 40˚
- 4.25”total rack travel
- Mounting clamp centers -11.60”

Clevis Ends

-6061-T6511 billet aluminum
-Accepts 3/8” high misalignment rod ends HXAM-16T (RH threads) HXAB-16T (LH threads)
-Black anodzied finish

Mounting clamp - Pinion side

-6061-T6511 billet aluminum
-7/16”-14 bolt holes on 1.25” centers
-Black anodized finish

Mounting clamp - Opposing Side

-6061-T6511 billet aluminum
-3/8-16 bolt holes on 1.375” centers
-Black anodized finish

Housing Tube

-6061-T6511 billet aluminum
-Black anodized finish

Pinion

-4140 premium alloy steel
-Heat treated or hardness

S3448 Steering rack mounting dimensions

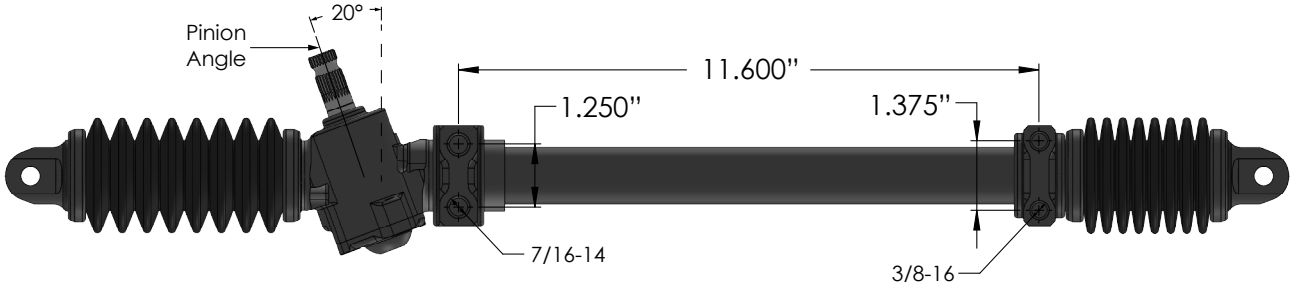

S3448 Steering rack total travel

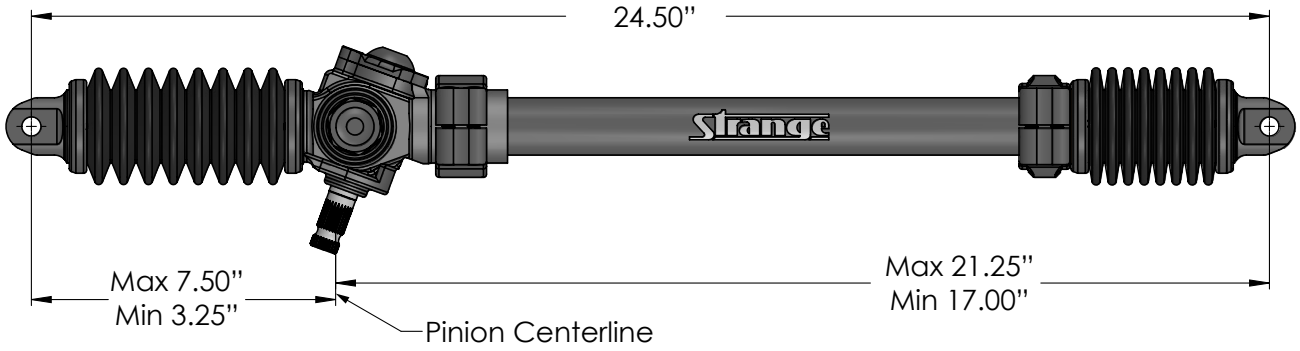

Steering Rack Parts

S3448 Kit Contents

ITEM#	PART#	QTY	DESCRIPTION	ITEM#	PART#	QTY	DESCRIPTION
1	S3448K	1	End Clevis- St. Rack L	14	S3448O	3	10-24 x 1/2" FHS SS
2	S3448N	2	1/4-20 X 5/16 Set Screw SS	15	S3448G	1	Preload Retainer Cap
3	S3448Q	4	Retainer Nut- Boot	16	S510E20	1	Preload Spring
4	SST158	4	6-32 X 1/8" Set Screw	17	S3448H	1	Preload Bushing
5	S3448L	2	2.18 OD x 6" Long Boot	18	S3448A	1	Steering Rack Housing
6	S3448T	2	VS-81 Smalley retainer	19	S3448I	1	Mounting Clamp "A"
7	S3448B	1	22.25" Round Rack	20	S3448D	1	Rack Housing Tube
8	S3441O	1	O-ring #114	21	S3448M	4	1/4-20 X 1.25 SHCS SS (Locking)
9	S3448R	1	Bearing- 6002JEM SKF	22	S3448J	1	Mounting Clamp "B"
10	S3448C	1	4.125" x.750 OD Pinion Shaft	23	S3448E	1	Housing Bushing
11	S3448S	1	Bearing- 6202JEM SKF	24	S3448P	2	M3 x 4mm Stainless Steel Screw
12	H1135C	1	1/2-20 Flexlock Nut				
13	S3448F	1	Pinion Retainer Cap	25	S3448KR	1	End Clevis- St. Rack R

S3448 Steering rack assembly exploded view

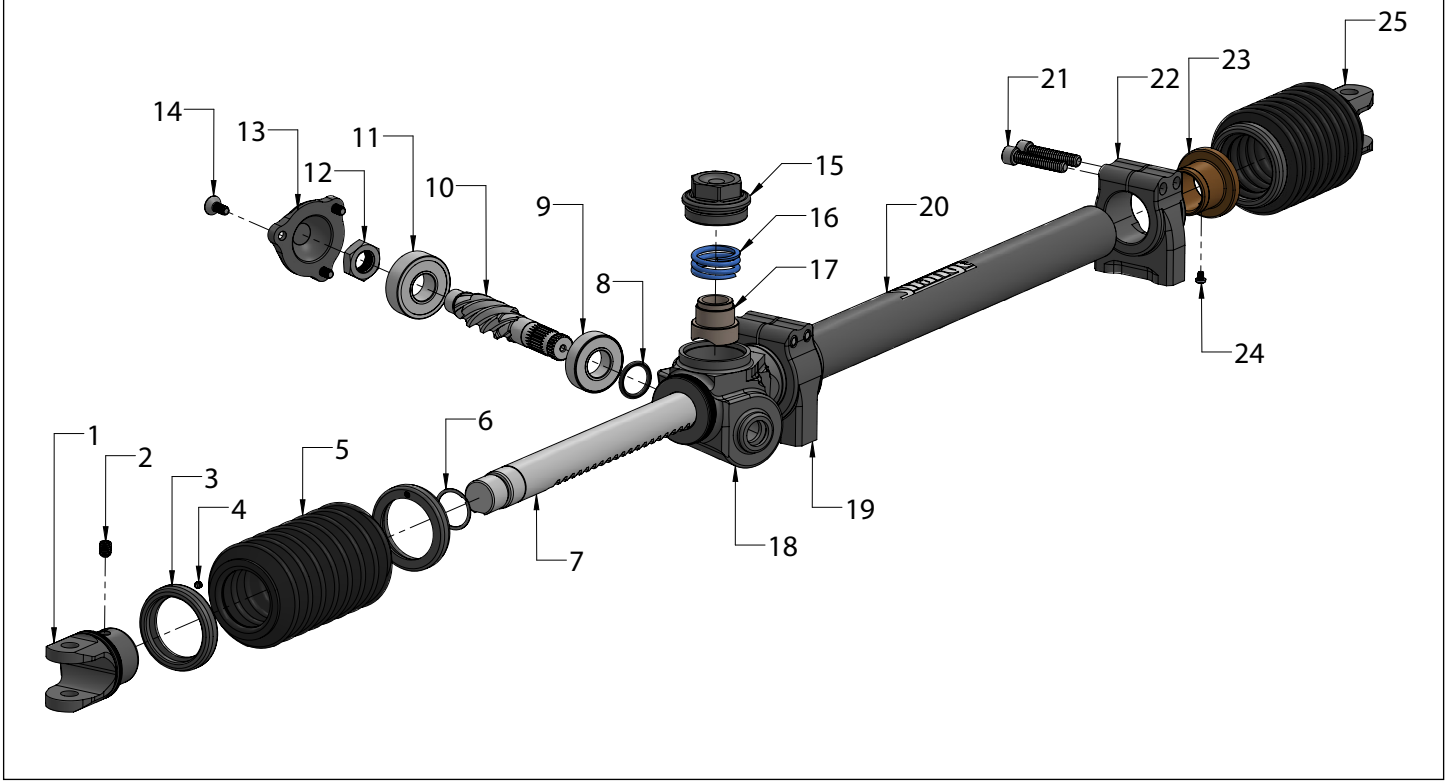

Steering Rack Adjustmants

Aug 11, 2020

Figure: 1: Disassembly

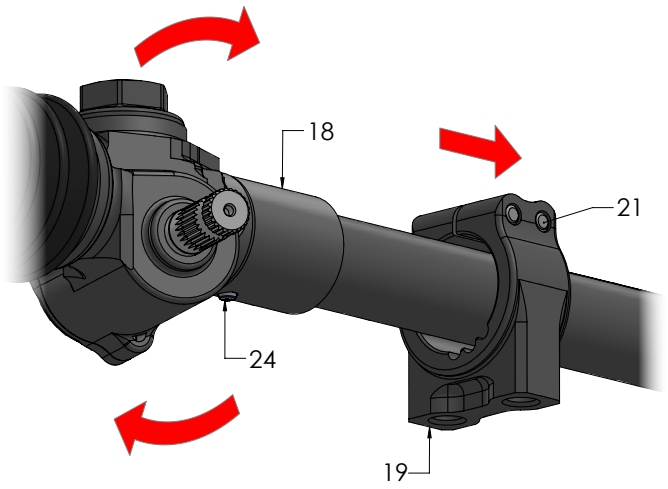

Figure: 2: Housing position

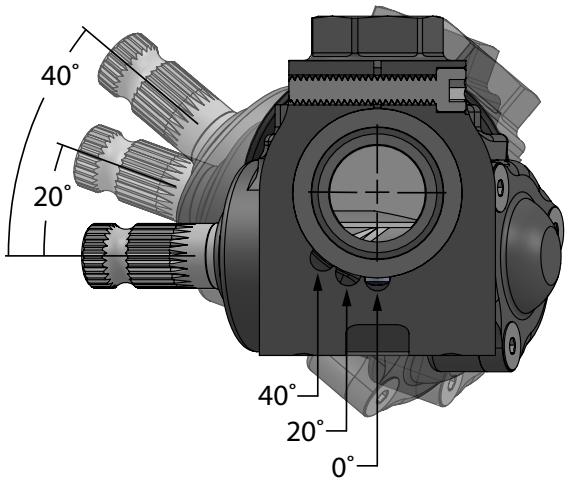

Steering rack housing adjustement

1. Loosen the screws (21) that are holding the mounting clamp (19) on the steering rack housing (18).
2. Slide the mounting clamps off of the steering rack housing.
3. Rotate the steering rack housing (19) to either the 0°, 20° or 40° postion. (Figure 2)
4. Slide the mounting clamp back onto the housing and button head screw (24).
5. Retighten the screw to secure the mounting clamp to the housing

Figure 3: Clevis end disassembly

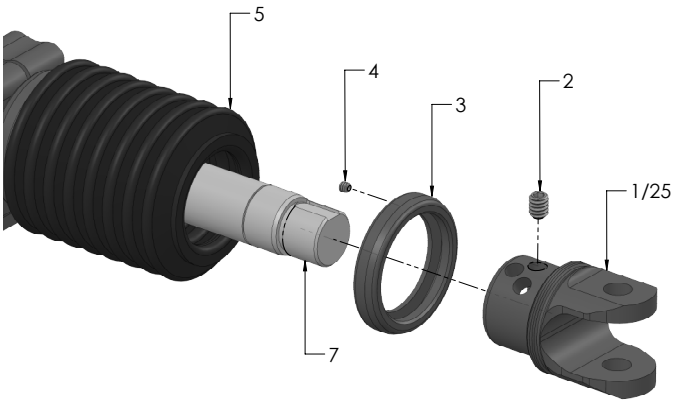

Figure 4: Clevis end position

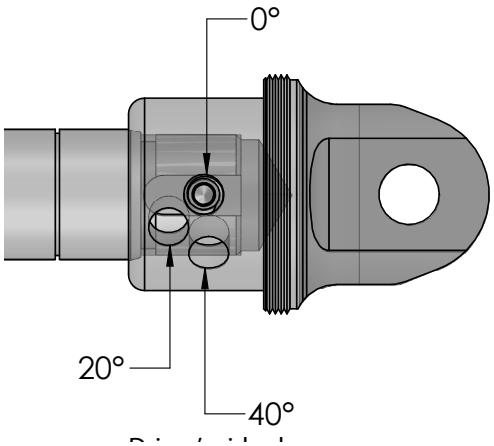

Note: Driver's side shown

End Clevis adjustment

1. Loosen the set screw (4) attaching the boot (5) to the boot retainer nut (3) and unscrew the retaining nut from the clevis end.
2. Loosen the set screw (2) inside the clevis end (1/25) and rotate the clevis end so that one of the holes shown in Figure 4 lines up with the mounting face on the steering rod (7).
3. Retighten the retaining nut onto the clevis end.

   Note: Apply some grease to the boot lip to smooth the tightening of the boot retaining nut.
4. Retighten the set screw retaining the boot into retaining nut (3) to lock the boot (5) in place.