Strange Engineering

Jun 28, 2012

STRANGE ALUMINUM COIL-OVER SHOCKS INSTALLATION INSTRUCTIONS

STRUT KIT #	APPLICATIONS
S5069- *Double Adjustable w/ Conical Spring*	1993-02'
S5071- *Double Adjustable w/ 2.50" I.D. Coil Spring*	Camaro & Firebird
S5269- *Single Adjustable w/ Conical Spring*	
S5271- *Single Adjustable w/ 2.50" I.D. Coil Spring*	

Before you begin installation:

Read these instructions thoroughly and save for future reference. If after reading these installation instructions, you have any questions or comments, please do not hesitate to call us.

Important Notes

- S1409 thrust bearing kits are recommended for all coil-over shocks to ease ride height adjustment.
- S1413 spanner wrenches are required to adjust ride height.
- For street applications using kits S5071 or S5271 a recommended starting point for springs are 14" long at a rate of 300 lbs/in. This ensures ride quality close to factory and a factory ride height with the spring seat nut mid range on the adjustment threads.
- 2.50" I.D. coil springs compatible with S5071 & S5271 are offered at a variety of different rates.
- S5069 & S5269 are only offered with 15" long conical springs at a rate of 300 lbs/in.
- Conical springs for this application allow for a longer spring that can store more energy resulting in an increase in weight transfer.
- All kits utilize the factory top mount and factory insulator.
  Note: A spring compressor is required to disassemble factory shock if reusing shock mount and insulator. Ensure to take proper safety precautions when working with compressed springs.

Installation:

1. Raise and support front of vehicle on a level surface using suitable equipment.
2. Remove the wheel and tire.
3. Remove the brake caliper and secure to the chassis with zip ties. The brake lines do not have to be disconnected. Removing the brake caliper relives tension from the brake hose allowing for the steering knuckle to be moved further outboard providing enough room to remove the shock.
4. Remove the upper shock mounting bolts and nuts. ***(Figure 1)***
Note: If removing the driver side shock then the brake master cylinder will have to be unbolted from the booster in order to remove the upper bolts and nuts. The brake lines do not have to be disconnected.
5. Disconnect the stabilizer bar link from the control arm. ***(Figure 1)***
6. Remove the lower end shock nuts and bolts. ***(Figure 1)***
7. Carefully, remove the factory shock unit from the vehicle and disassemble top mount.
8. Slide the factory top mount over the top stud.
(Figure 2 for S5071v & S5271 / Figure 3 for S5069 & S5269)
9. Position the factory insulator into the top mount. Ensure correct orientation.
10. Install the lock nut (3). Torque to 35 ft-lbs by using a 3/4" wrench to hold the top stud in position.
11. The bar pin can be rotated to a slight angle for ease of installation.
12. Position the shock on the lower control arm.
13. Reinstall the lower mounting nuts and bolts. Torque to 48 ft-lbs.
14. Ensure the factory top mount is properly aligned to the holes on the strut tower. Using a floor jack, carefully lift the lower control arm until the factory top mount studs are through the strut tower.
15. Reinstall the stabilizer bar link.
16. Install the upper top mount bolts and nuts. Torque bolts to 37 ft-lbs and nuts to 32 ft-lbs
17. Reinstall brake caliper and master cylinder.

Jun 28, 2012

STRANGE ALUMINUM COIL-OVER SHOCKS INSTALLATION INSTRUCTIONS

STRUT KIT #	APPLICATIONS
S5069- *Double Adjustable w/ Conical Spring*	1993-02'
S5071- *Double Adjustable w/ 2.50" I.D. Coil Spring*	Camaro & Firebird
S5269- *Single Adjustable w/ Conical Spring*	
S5271- *Single Adjustable w/ 2.50" I.D. Coil Spring*	

Figure 1: Upper & Lower Shock Mounting Bolts & Nuts

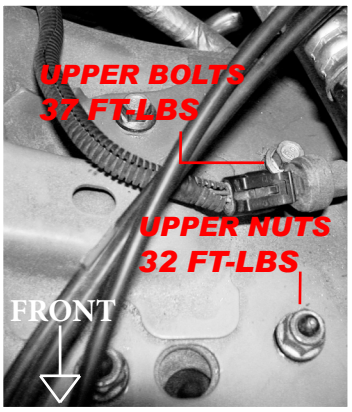

Ride Height Adjustment

- Ride height is adjusted by rotating the bottom spring seat nut
- The adjusting jam nut is tightened to lock the bottom spring seat nut in place

(Strange S1413 Spanner wrenches & S1409 thurst bearing kit shown)

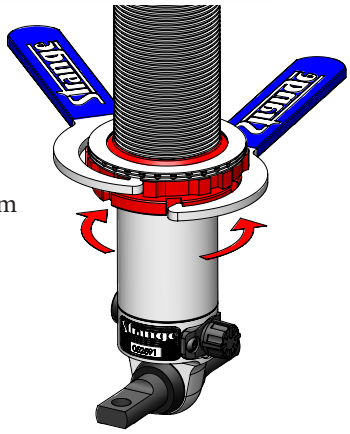

Figure 2: 2.50" I.D. Coil Spring

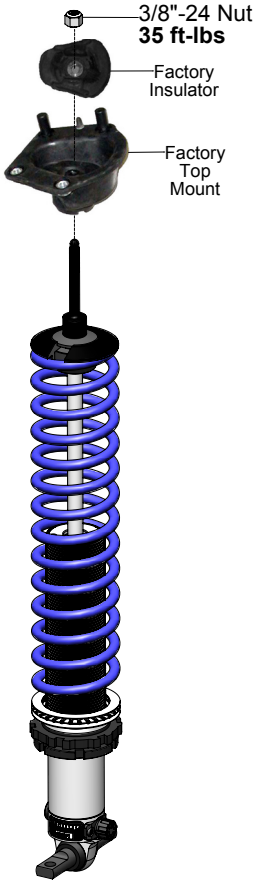

Figure 3: Conical Spring

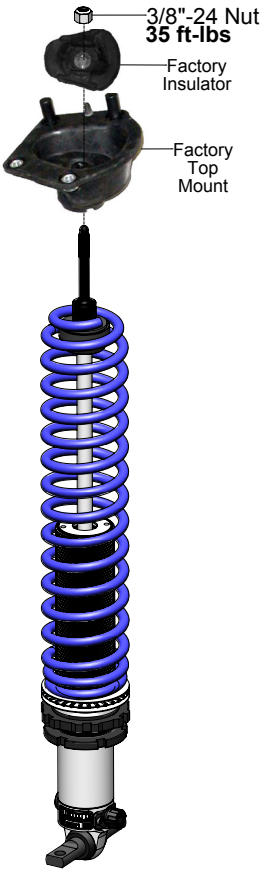

Extension Adjustment

- 10 extension settings
- Performance is maximized by correlating each extension adjustment to an internal compression setting
- Never force the knob

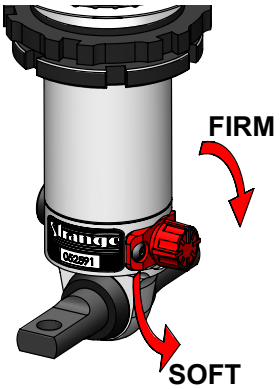

Compression Adjustment
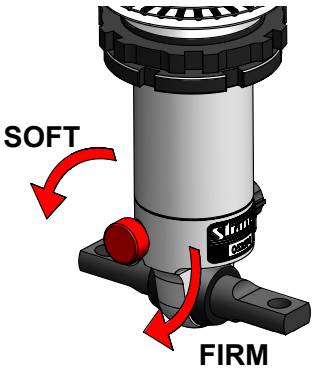
- 9 compression settings
- Knob clicks every 1/8 of a turn for fine adjustments
- Never force the knob