EVOLUTION 4-PISTON FRONT BRAKE KIT INSTRUCTIONS

KIT #
B4152WCE - 05-14 Mustang
B4186WCE - 15-23 Mustang

APPLICATIONS
05-23 Ford Mustang using
4-1/2" Bolt Circle Wheels

Evolution Rotors

- Dynamic Drive Mount (DDM) system secures the rotor and allows for rotor thermal expansion
- DDM system design is secured by an internal Spirolox, eliminating heavy bolts and hardware
- Unique Aero Slot design reduces rotating weight and promotes even heat dissipation

Before you begin installation:

-Strange Engineering brake kits are designed for DRAG RACING ONLY!
-Read these instructions thoroughly and save for future reference.
-Brake fittings do not come pre-installed, it will need a layer of Teflon sealer applied to the thread (Figure# 2 for torque specs)
-If after reading these installation instructions, you have any questions or comments, please do not hesitate to call us.

Note:
-This kit does not retain the use of ABS.
-B2798AS (11-¼" Evolution rotors) have a 0.355" start out thickness and minimal thickness of 0.312".
-Also consult installation instructions for B1900 Four piston caliper kit.

Kit Contents

ITEM#	PART#	QTY	DESCRIPTION
1	B4154EB	2	Hub cap
2	S3520F	2	O-ring
3	B4152G	2	Spindle nut
4	B2798AS	2	Evolution S Rotor
5	B2794B	2	2-Piece rotor adapter
6	B2794D	2	Spirolock
7	B4152B	2	Front hub
8	A1028B	10	1/2" washer
9	A1028A	10	1/2"-20 x 2-1/2" Wheel stud
10	B4152I	2	Outer Bearing Sleeve (installed in B4152B)
11	B4152C	2	Hub Bearing (installed in B4152B)
12	B4152H	2	Inner Bearing Sleeve (installed in B4152B)
13	B4152D	2	Hub Bearing Retainer Ring (installed in B4152B)
14	B4152E	2	M12 x 1.75 x 40mm Caliper Bracket Bolt
15a	B4152AL	1	Driver side Caliper Mount Bracket
15b	B4152AR	1	Passenger side Caliper Mount Bracket
16	B1301E	4	3/8"-24 Press Nut (installed in B4152AL/B4152AR)
17	B1301H	16	3/8" I.D. x .025" Thick Caliper Shim
18	B1900	2	Billet Caliper
19	B1301J	4	3/8" I.D. x 1/16" Flat Washer
20	B5000Z	4	3/8"-24 x 1.187" Caliper Bolt
21	B4152F	2	M12 x 1.75 Nylon lock Nut
22	B5010	4	DRM-35 metallic 4-piston brake pad
23	P2316	2	–1/8 NPT x #3AN Brake Line Fitting
24	B4152K	2	0.645" Caliper mount spacer (B4186WC Only)

WARNING – RACING IS HAZARDOUS · STRANGE BRAKES ARE FOR LEGAL DRAG RACING ONLY
Disclaimer of Warranty – Purchasers using Strange Engineering racing components and equipment any and all inventory services, purchasers acknowledge that due to differing conditions and circumstances under which all equipment and parts are installed and used, purchasers are not relying on Strange Engineering Co. skill or judgment to select or furnish the proper part or equipment. Purchasers expressly affirm they are relying upon their own skill or judgment to select and purchase suitable goods.
Strange Engineering Co. makes no warranties whatsoever, expressed or implied, oral or written, to purchasers. There is no warranty of merchantability made to purchasers.
Strange Engineering Co., further excludes any implied warranty of fitness with respect to racing and equipment, any and all inventory and service.

Installation instructions

Figure # 1

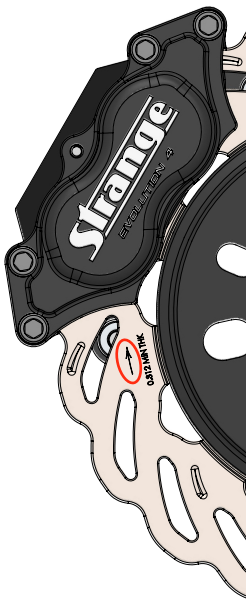

1. Raise and support front of vehicle on a level surface using suitable equipment.
2. Remove the stock wheel, brake lines, caliper, rotor, spindle nut, hub, and dust shield.
3. Clean the spindle and inspect suspension components for damage. Repair as needed.
4. Slide the caliper mounting bracket (15) over the spindle with the heads of the press nuts (16) facing outboard.
5. Slide the caliper bracket bolt (14) through the caliper bracket (15) and top caliper bracket hole on the knuckle.
   Note: A spacer (24) will be required between the caliper bracket (13) and the knuckle if using B4186WC.
6. Install the nylon lock nut (21) and torque the caliper bracket bolt (14) to 50 ft-lbs.
7. Install wheel studs (9) in the front hub (7) with 1/2" washers (8). Use BLUE Loc-tite® on the studs (9). Torque all studs (9) to 65 ft-lbs.
8. Slide the front hub (7) with the pre-installed hub bearing (11), retainer ring (13) and sleeves (10,12) onto the spindle.
9. Install the spindle nut (3) and torque to approximately 200 ft-lbs.
10. Install the hub cap (1) with the O-ring (2).
11. Slide the rotor (4,5,6) over the wheel studs flush to the face of the hub (7).
    Note: Evolution rotors mount with the arrow pointing in the direction of normal rotation (See Figure #1)
12. Attach the caliper (16) to the caliper mounting bracket (13) using the caliper bolts (18) with red loctite, flat washers (17), and shims (15). Torque caliper bolts to 35 ft-lbs.
    Notes: The number of shims (15) installed will vary because not all spindles are exactly identical. Therefore, determine the proper amount of shims by positioning the caliper as closely as possible to the center of the rotor. Also, note that the passenger and driver side do not necessarily use the same amount of shims.
    Connect the hydraulic lines to the calipers. Calipers are tapped to 1/8"-27 NPT and supplied with –3AN fittings.
13. Use proper adapters to connect them to existing lines or use new –3AN braided steel line (teflon lined). Bleed the calipers with DOT 4 or DOT 5.1 brake fluid ONLY. Mount the tire and wheel.

Notes: After the initial installation of this kit, ensure that there is adequate clearance between all braking and chassis components by turning the wheels all the way left to right and moving them all the way up and down throughout the length of the wheel (suspension) travel. Additionally, make sure that the brake lines are not interfering with the wheel travel, or subject to binding or kinking. A proper break in procedure is required to avoid brake fade and uneven rotor deposits from the pads. It consists of 8-10 brake applications increasing in harshness while allowing the brakes to cool slightly in between; do not keep the brakes applied between stops. After the last stop the brakes should be allowed to cool completely. Operate the vehicle in a cautious manner until you determine that the brakes are functioning properly. Routinely check and re-torque all bolts.

Figure # 2: Exploded B4152WCE Assembly View

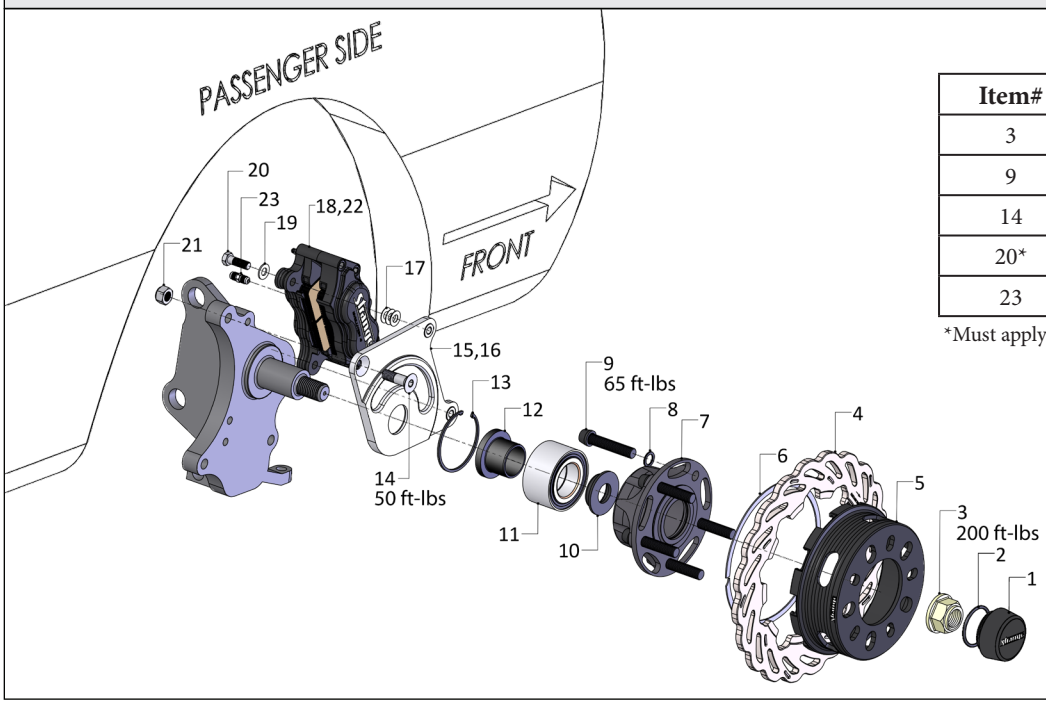

Item#	Torque spec (ft-lbs)
3	200
9	65
14	50
20*	35
23	25

*Must apply red loctite