EVOLUTION 4-PISTON FRONT BRAKE KIT INSTRUCTIONS

KIT #
B4140WCE - 4-¾" B.C Mustang and Pinto
B4141WCE - 4-½" B.C Disc Spindles

APPLICATIONS
1974-1978 Mustang II
1974-1980 Pinto

Evolution Rotors

- Dynamic Drive Mount (DDM) system secures the rotor and allows for rotor thermal expansion
- DDM system design is secured by an internal Spirolox, eliminating heavy bolts and hardware
- Unique Aero Slot design reduces rotating weight and promotes even heat dissipation

Before you begin installation:

-Strange Engineering brake kits are designed for DRAG RACING ONLY!
-Brake fittings do not come pre-installed, it will need a layer of Teflon sealer applied to the thread (Figure# 2 for torque specs)
-Clean and inspect spindle for damage (spun wheel bearings, stripped threads, etc.) and repair or replace as needed.
-Inspect upper and lower ball joints for excessive play and replace as needed.
-Remove stock disc, hub and dust shield assembly from spindle.
-Read these instructions thoroughly and save for future reference.
-If after reading these installation instructions, you have any questions or comments, please do not hesitate to call us.

Kit Contents

ITEM#	PART#	QTY	DESCRIPTION
1	B4154E	2	Hub Cap
2	S3520F	2	Buna O-Ring
3	B2798AS	2	Evolution S Rotor
4	B2794B	2	2-Piece rotor adapter
5	B2794D	2	Spirolock
6	B1330D	2	Outboard Wheel Bearing
7a	B4154C	2	4-¾" Front Hub (B4140WCE)
7b	B4154SP	2	4-½" Front hub (B4141WCE)
8	B1330A	2	Inboard Wheel bearing Cup (installed in B4154C/B4154SP)
9	B1330C	2	Outboard Wheel Bearing Cup (installed in B4154C/B4154SP)
10	A1028B	10	1/2" Washer
11	A1028A	10	1/2"-20 x 2-1/2" Wheel Stud
12	B1330B	2	Inboard Wheel Bearing
13	B1328B	2	Hub Seal
14	B1381D	6	3/8"-16 x 1" Caliper Bracket Bolt
15	S3402N	6	3/8" AN Washer
16	B4140AL/R	1 each	74-78 Pinto Caliper Bracket (Left/Right)
17	B1301E	4	Caliper Bracket 3/8"-24 Press Nut (installed in B4140AL/R)
18	B1301H	16	3/8" I.D. x .025" Thick Caliper Shim
19	B1900	2	Billet Caliper
20	B1301J	4	3/8" I.D. x 1/16" Flat Washer
21	B5000Z	4	3/8"-24 x 1.187" Caliper Bolt
22	B5010	4	DRM-35 metallic 4-piston brake pad
23	P2316	2	-1/8 NPT x #3AN Brake Line Fitting

WARNING – RACING IS HAZARDOUS · STRANGE BRAKES ARE FOR LEGAL DRAG RACING ONLY
Disclaimer of Warranty – Purchasers using Strange Engineering racing components and equipment any and all inventory services, purchasers acknowledge that due to differing conditions and circumstances under which all equipment and parts are installed and used, purchasers are not relying on Strange Engineering Co. skill or judgment to select or furnish the proper part or equipment. Purchasers expressly affirm they are relying upon their own skill or judgment to select and purchase suitable goods.
Strange Engineering Co. makes no warranties whatsoever, expressed or implied, oral or written, to purchasers. There is no warranty of merchantability made to purchasers. Strange Engineering Co., further excludes any implied warranty of fitness with respect to racing and equipment, any and all inventory and service.

Installation instructions

Figure # 1

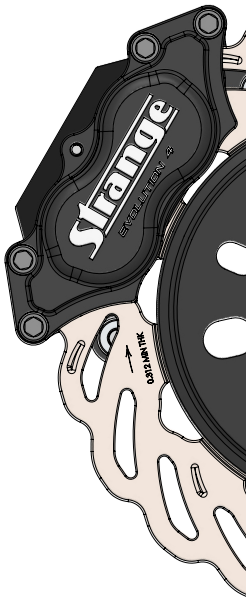

1. Slide the caliper mounting bracket (14) over the spindle with the heads of the press nuts (17) facing outboard.
2. Secure the caliper bracket to the spindle body using the three caliper bracket bolts (14) and 3/8" washers (15). Torque the caliper bracket bolts (14) to 35 ft-lbs.
3. Install wheel studs (11) with 1/2" washers (10) in the front hub (7). Use BLUE Loc-tite® on the studs. Torque all studs (11) to 65 ft-lbs.
4. Pack the inboard wheel bearing (12) and inboard side of the hub with a suitable wheel bearing grease. Install the inboard wheel bearing (12) into the pre-installed inboard wheel bearing cup (8) in the hub (7). (See Figure #2)
   Note: If a bearing packer is not available work as much grease as possible into the cage around the rollers.
5. Press the seal (13) into the inboard side of the hub (7)
6. Slide the hub assembly (7) with components onto the spindle.
7. Pack the outboard wheel bearing (6) and outboard side of the hub (7) with grease. Slide the outboard wheel bearing (6) over the spindle and into the pre-installed outboard wheel bearing cup (9) in the hub. (See Figure #2)
8. Install the OEM spindle nut washer and spindle nut.
9. Install the wheel and tire on the hub and snug the wheel lugs.
10. While rotating the wheel, torque the spindle nut to approximately 20 ft-lbs.
11. Back the spindle nut off until the wheel spins freely and there is no end play. Install the cotter pin.
12. Remove wheel and tire.
13. Slide the rotor (3,4,5) over the wheel studs flush to the face of the hub (7).
    Note: Slotted rotors mount with the arrow pointing in the direction of normal rotation. (See Figure #1)
14. Install the hub cap (1) with the o-ring (2).
15. Attach the caliper (19) to the caliper mounting bracket (16) using the two caliper bolts (21) with red loctite, flat washers (20) and shims (18). Torque caliper bolts (21) to 35 ft-lbs.
    Notes: The arrow on the caliper must face the normal rotation of the rotor/wheel. (See Figure #1). The number of shims (18) installed will vary because not all spindles are exactly identical. Therefore, determine the proper amount of shims by positioning the caliper as closely as possible to the center of the rotor. Also, the passenger and driver side do not necessarily use the same amount of shims.
16. Connect the hydraulic lines to the calipers. Calipers are tapped to 1/8"-27 NPT and supplied with –3AN fittings. Use proper adapters to connect or use new –3AN braided steel line (teflon lined). Bleed the calipers with DOT 4 or DOT 5.1 brake fluid ONLY.
17. A proper break in procedure is required to avoid brake fade and uneven rotor deposits from the pads. It consists of 8-10 brake applications increasing in harshness while allowing the brakes to cool slightly in between; do not keep the brakes applied between stops. After the last stop the brakes should be allowed to cool completely.

FIGURE # 2: Exploded B4140WCE Assembly View

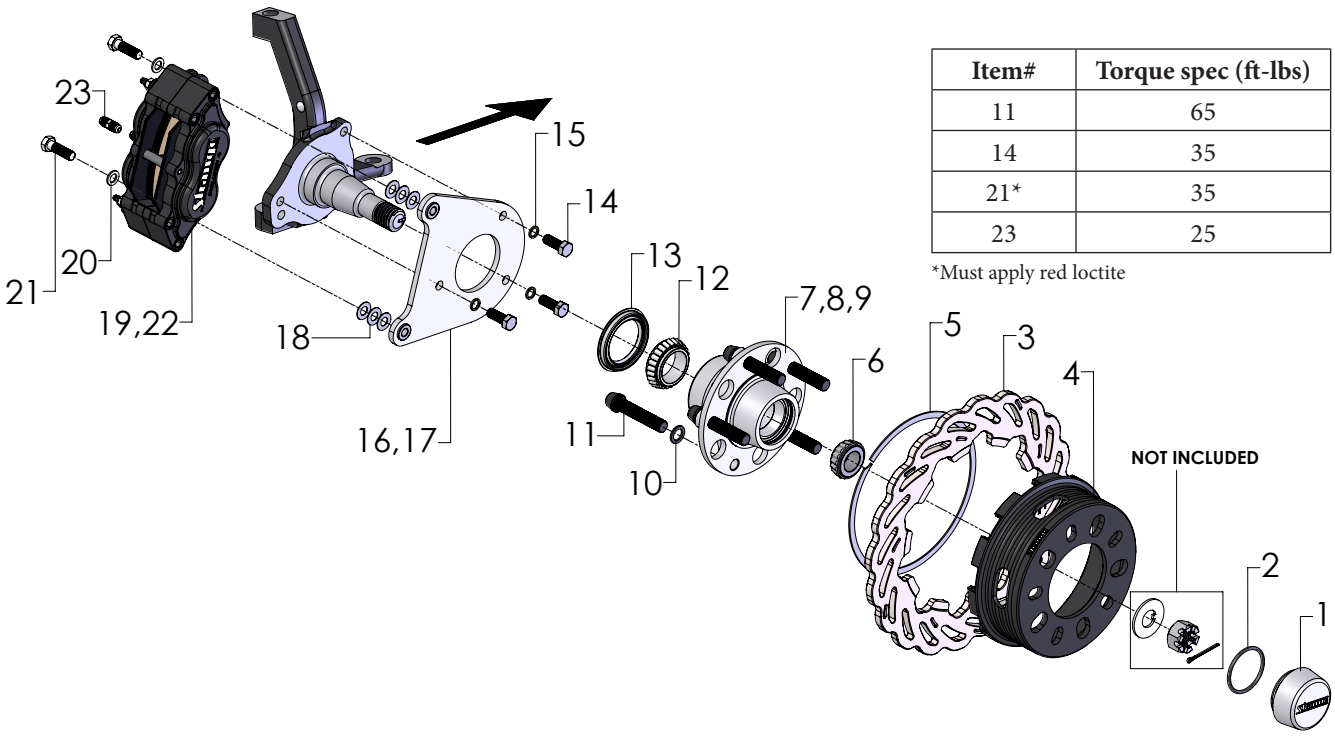

Item#	Torque spec (ft-lbs)
11	65
14	35
21*	35
23	25

*Must apply red loctite